COMMUNICATION MANAGEMENT IN PUBLIC INSTITUTIONS

Liliana – Victoria Gherman[1]

Abstract

Communication is considered a valuable tool for obtaining high performance within an organization. In public institutions, the specialists in communication represent the strategic counsellors of the top management.

The managerial communication should focus on the interpersonal communication in the institutional framework. In this way, communication must support the achievement of the institution's mission.

An efficient communication process is determined by knowing the institutions activities, the system of decision making and receiving the feedback.

Communication, as the function of the modern management, must ensure the adequate circulation of the information inside the institution, but also in the external context by using the modern means of communication.

Keywords*: management, communication, public institution, information, modern means of communication*

J.E.L Classification: D83

As a function of management, communication is the process of ensuring the correct flow of information within the organisation and in its relations with the external environment; in the latter case, the aim is above all to obtain useful information about relevant organisations and to disseminate promotional information about one's own organisation. The complexity of diversified activities and information in a highly competitive climate makes communication a key management function. It is very well known that the one that has the most complete information, in the most operational way, has the power. (Puiu A., 2021)

Communication plays an essential role in public institutions, and the success of the organisation depends largely on its quality. Nowadays, activities are almost inconceivable if there is no effective and polite communication between managers, employees and citizens.

Communication is a system of transmitting messages which can be mental processes i.e. conclusions, thoughts, inner decisions or physical expressions i.e. attitudes, gestures etc. People take the message, process it to understand it and launch it, and they can bring some changes as well.

Communication takes place in a specific setting, which has several distinct aspects: physical, cultural, socio-psychological and temporal.

The physical aspect refers to the concrete physical environment, the microclimate; the cultural aspect takes into account traditions, lifestyle, moral and local norms; the socio-psychological aspect refers to the position and social status of the interlocutors and the formality of their relationships; the temporal aspect denotes the validity of time, i.e. the moment and chronological order in which the message is placed in a sequence of other consecutive messages.

In the process of communication, actions constitute a rule of the game, an ethic based on a double benefit, i.e. in the interest of both partners. An intelligent message acts on the negotiator's psyche, sometimes leaving him or her not fully aware of this aspect and under the impression that he or she is in fact deciding according to his or her own interests.

[1] Associate Professor, PhD, "Constantin Brâncoveanu" University of Pitesti, Faculty of Management Marketing in Economic Affairs Braila, email address: liliana.gherman@yahoo.com

Figure 1

Communication system

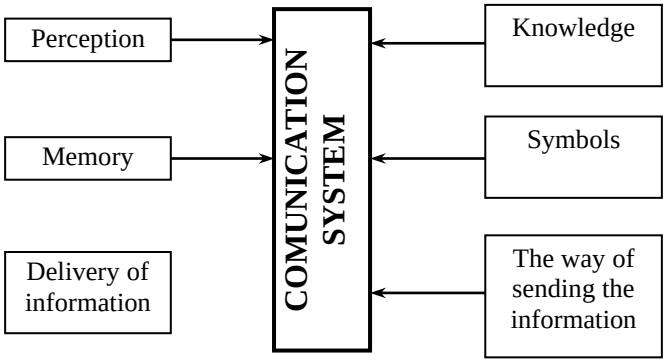

If we look at the communication process as a system, the processes to be analysed are: perception, memory and delivery of information, knowledge for obtaining and interpreting information, symbols and their request, the way of sending the message.

Communication should not be reduced to a simple expression of problems. From this point of view, there is a difference between '**saying**' and '**communicating**' or between '**hearing**' and '**listening**'. Saying is a one-way process, while communicating involves the transfer of information in both directions (Cândea R. M. and Cândea D., 1996).

When we refer to communication we consider three components: outward communication which includes verbal and nonverbal actions noticed by the interlocutors; metacommunication which refers to the perceived meaning of the message i.e. what is understood beyond the word; intra-communication is the communication process by which we communicate a received message, we do not argue ourselves, we do not answer questions, we do not admonish, we "talk" to ourselves.

An important role in communication is played by the message, which is the complex element of the communication process. **A message has at least two dimensions: the content, which refers to information about phenomena, and the relationship, which refers to information about the correlation between phenomena**. The message can be conveyed through verbal language, i.e. using words, and through non-verbal languages that use something else than words as a means of expression, e.g. body language, language of things, language of space, language of time.

Verbal communication plays a key role in public institutions. Communication must take into account the values of civilisation, economic, political, natural, religious and specific factors, as well as the individual characteristics of the interlocutors.

Verbal communication **allows a logical interplay of questions and answers in a flexible spontaneous flow, which is not possible when negotiations take place in writing or by other techniques.**

A number of activities are carried out through verbal communication: obtaining and passing on information; drawing up proposals; expressing opinions, whether convergent or divergent; reaching agreement and concluding deals or disagreement, with its effects of blocking negotiations or postponing them.

Another quality of verbal communication concerns the possibility of clarifying certain issues during discussions. The role of clarification is mainly to test the degree of understanding of the phenomenon and the common conclusions.

There are known requirements and restrictions in verbal communication:

- full respect for the principle of politeness in expression, which is distinguished by complexity and elements of refinement. In order to achieve this principle, it is necessary to decode the socio-cultural background of the partner, because phrases that are normal and natural for us may be offensive to the partner. Politeness has been likened to a golden key that

opens all doors, but at the same time it should be borne in mind that excess politeness, excess ceremony is often as badly rated as lack of politeness.

In verbal communication one should avoid "suicide phrases" such as "you didn't understand me", "I wasted so much time with you", "I didn't travel thousands of kilometers to deal with anyone", etc.

- **the moderation of speech** means avoiding extremes, such as: presenting one's own problem as a monologue, which can be psychologically a form of aggression towards the interlocutor; entering into a so-called silence which leads to the interruption of the discussion.

Regarding the first aspect, it is necessary to speak but not interrupt the partner too often, to take the initiative but not to suffocate him/her with excessive presentation of our problems, to give information or answer questions in such a way as to make it easier to take a decision.

- **listening to the other person.** Sometimes "**silence (listening) is golden**". The tactic of listening is recommended not as an expression of incompetence, but as the patience to wait for the partner's reactions to one's statements, proposals and offers.

Listening can be in turn:

- active listening, which involves a series of activities designed to ensure that the message is received correctly and retained optimally;

- interactive listening, which involves the possibility of interacting directly with the speaker in two ways, by asking questions and by asking for confirmation of the message. (Dr. Puiu A., Dr. Moarcăş O., Dr. Gherman L., 2001)

Listening can also take place when the message contains non-critical information, at the factual level when looking for specific information in the message, and at the empathic level when seeking to perceive the message from the speaker's frame of reference.

- **avoiding frequent interruptions and disapproval during discussions**. Repeated interruptions and disapprovals irritate the interlocutor and can lead to nervousness, to the breakdown of communication taking place within an organisation or between representatives of the public institution and citizens;

Public communication can be formal when it is carried out through channels specific to the organisation's structure and is required by the functional relations between employees of different departments and citizens. This type of communication is found in the regular activities of the organisation. In the case of informal communication, i.e. information that is not directly related to the activity, the channels used are other than formal, the rules of communication are less strict. Formal and informal communication networks coexist and sometimes interfere with each other, in the sense that informal communication can block the flow of information in the formal network, distort it according to the relationships and interests of those involved, or, on the contrary, make formal communication more flexible and improve it.

Formal communication networks exist in the organisation chart, which is the document that represents the functional organisation of activities and the nature of the subordination and coordination relationships between departments. The conduct of formal written or oral communication is governed by a series of implicit and explicit rules concerning the content of information, the responsibility for compliance with who issues and who controls and signs in the case of written messages.

Communication techniques differ according to the direction of information flow:

Top-down communication takes place in line with situations arising or the issuing of decisions, provisions, instructions, information. The concrete forms used by an organisation can be decisions, information circulars, brochures or manuals with rules and instructions, company newspapers, radio messages, reports to the General Assembly of Employees or Shareholders.

Upward communication can be a response to various situations and messages from management or the transmission of requests, complaints, opinions. The forms used may be memos, reports, regulated by the rules of organisation and operation. In addition, the management may use data from opinion or attitude questionnaires to support its decisions. Recent techniques for collecting employee dissatisfaction are the so-called "hot-lines" and "open door".

But public communication is not limited to these forms; there are specific ways of operational, two-way communication between hierarchical levels, different departments such as meetings, committees, interviews, focus groups.

There are organisations with rigid communication structures that do not allow horizontal communication within or outside the group, which can be an advantage when the activity requires a so-called 'unity of command' (military-type structures) or, on the contrary, a disadvantage if the activity requires flexibility and dynamism in communication (industrial, commercial, service or public relations structures). In the latter case, the official who has to solve a problem with the help of a counterpart in another department or workshop would be wasting a lot of his time and that of his superiors. It is much more practical for the activity to be able to communicate horizontally. It is generally accepted that hierarchical networks are more rigid and slower, but they allow control and reinforce authority, while a less strict organisation allows more democratic and flexible communication, providing participants with more satisfaction.

Parallel to formal communication, informal communication is initiated between individuals to exchange information that is not directly related to the work. Over time, formal communication networks are formed, based on emotional criteria (like or dislike), common interests within an organisation; the channels used are different from formal ones, the rules of communication are less strict.

The means of communication in a public institution: verbal, non-verbal or by means of media, are chosen according to the specific task, the content of the message, the specific receiver. Oral communication is quicker and produces greater satisfaction, but in the case of standard messages: instructions, regulations, rules, reports, written communication is more appropriate, both because it can be disseminated more quickly and in a more standardised way and because it can be more useful in establishing responsibilities in dispute situations.

Written communication is used in the organisation for messages that need to have continuity or to establish responsibility in an unambiguous way. Written communications may represent elements of accounting records, they may be documents that will be kept for some time in archival holdings, they may be used as evidence in court. The larger the organisation is and the more complex the activity, the greater is the proportion of written documents in the overall communication.

In an organisation, written communication can be standardised, i.e. all the forms that systematise information about different aspects of the work, or occasional. The route of written communications may be clearly defined (especially in the case of standardised communications, there are people and even specialised departments who draw them up, direct their flow or approve them), but there are also occasional written communications, which have a less rigorous route.

As a rule, public institutions have a clear description of all these aspects, or even strict regulations.

Through their activity, public institutions must envisage to satisfy the general interest of the population, with the obligation to get closer to the members of the local community and maintain permanent contact with them. Public administration must communicate, be open to dialogue, respect and take the citizen into account.

Public communication is the form of communication specific to the work of public institutions in the general interest. The messages conveyed include information of public interest, making citizens aware of the existence of public sector organisations, how they operate and what they do, and the legality and appropriateness of decisions taken. At the same time, public communication aims to make known the needs and wishes of the population so that public institutions, through their role and powers, can meet them, thus achieving a general interest.

The role of public communication is to convince the public that institutional policies and public decisions are in the general interest, thus winning the support of citizens.
Citizens must be informed about the existence and functioning of public services, their grievances must be listened to, their wishes and needs must be taken into account.

In the case of public administration institutions, the representatives of the public institution must communicate with the citizen. In the process of communication, the relationship between the civil servant and the citizen plays an important role. The communication units, i.e. the civil servant as sender and the citizen as receiver of messages, have clear objectives: the sender aims to inform, to convince, to guide, to capture interest, to be effective, and the receiver will strive to be attentive, to understand, to remember.

Communication with citizens is achieved through: the media, official newsletters, websites, information centres, exhibitions, information activities, debates, communication sessions, research programmes, cultural and educational activities, NGOs, citizens' advisory committees, participation in competitions, own publications, posters, written and oral transmission of various types of information to and from the management and specialist structures of public administration institutions.

Citizens come into contact with local public institutions and, as a result, need to know how to address themselves to satisfy a legitimate interest, what documents they need to fill in, what procedures they need to follow. Local public institutions have an obligation to provide the public with practical information to make citizens aware of the rules they have to follow in their dealings and to facilitate their access to local public services.

An open partnership relationship will facilitate the two-way flow of information. The initiator of this relationship must be the administrative institution, which has an obligation to seek the most effective and specific models for feedback and knowledge of local resources.

Some communication barriers may arise in communicating with citizens.

In the communication process there are sometimes communication difficulties, so-called communication barriers, such as:

- Regarding the sender-receiver relationship: emotional state of the receiver; routine, which influences receptivity; lack of attention in receiving the message; hasty conclusions on the message; lack of interest of the receiver in the message;
- At the language level, the same words may mean different things to different people, particularly because of differences in training and experience; difficulties of expression; awkward expression of the message by the sender; use of confusing words or expressions.

There is a complex link between communication and information in public institutions. Information is the source on which communication is based, but also the way in which it is expressed. Communication is correct if it is based on correct information, but also if it correctly conveys the information held.

The information is assimilated by the receiver as a result of clear communication appropriate to his cultural background and aspirations, or the same information may not be received if confused communication is used.

The quality of communication is therefore crucial to the understanding of the information transmitted by the sender to the receiver.

Bibliography:

Cândea R., Cândea D., ”*Comunicarea managerială: concepte, deprinderi, strategie*”, Ed. Expert, Bucureşti, 1996

Puiu A., „*Management. Analize şi studii comparative,* ed. a III-a revizuită, Ed. Independenţa Economică, Piteşti, 2021

Dr. Puiu A., Dr. Moarcăş O., Dr. Gherman L., ”*Teorii şi tehnici de comunicare*”, Editura Independenţa Economică, Piteşti, 2001